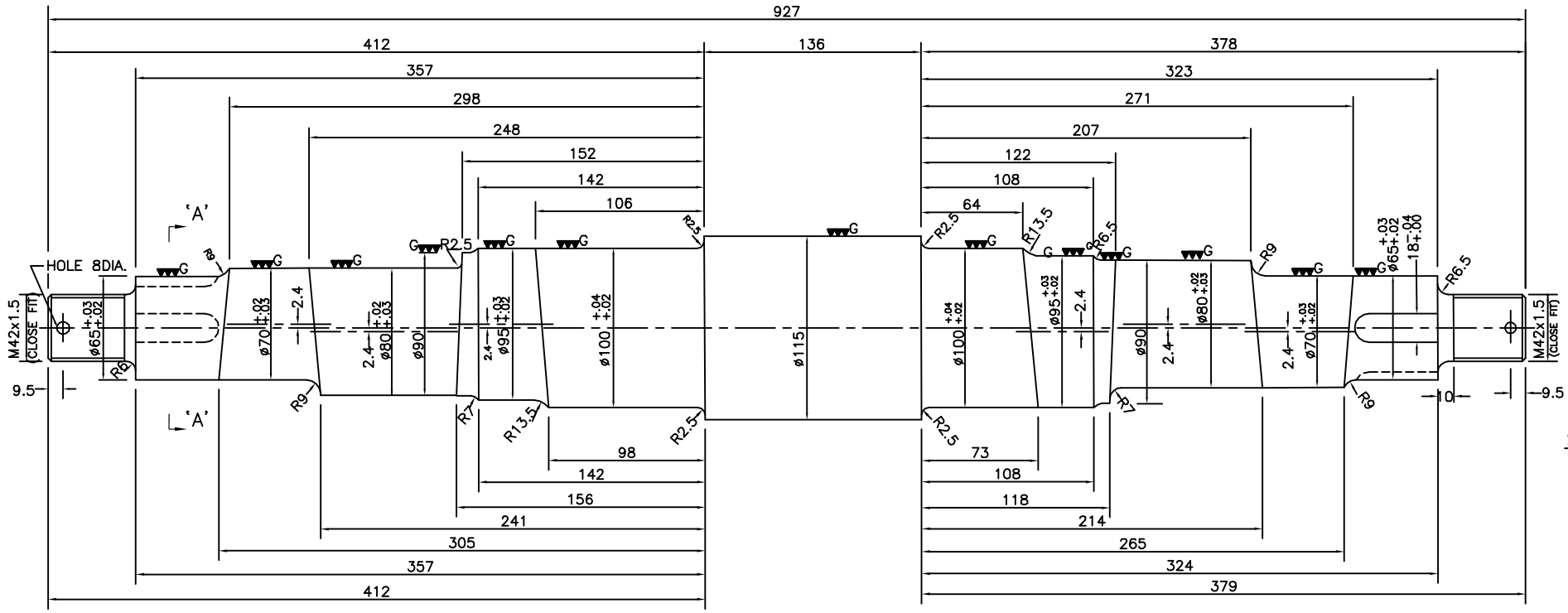

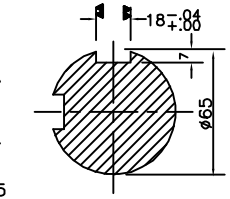

SECTION AT 'A–A'

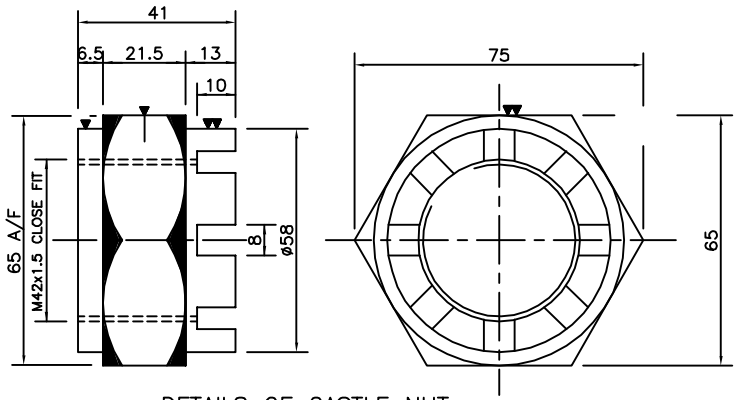

DETAILS OF CASTLE NUT

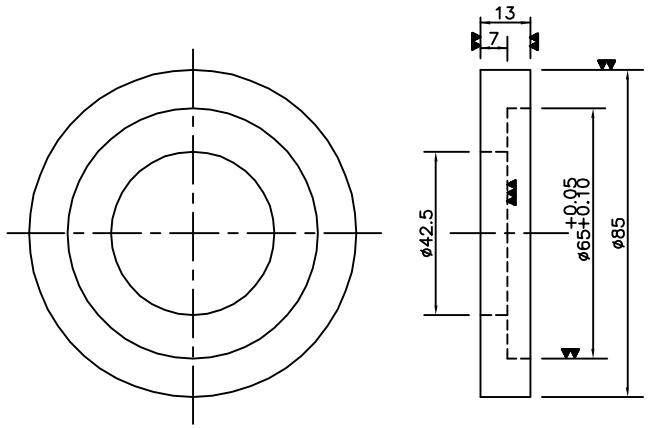

DETAILS OF DISC

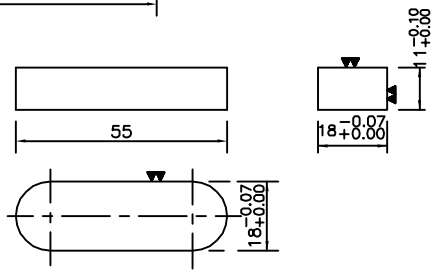

DETAILS OF KEY

4. TOLERANCES MAY BE INDICATED INDIVIDUALLY UPON SUITABILITY OF FITMENTS.
3. MATERIAL FOR SHAFT EN–24, FOR NUT,DISC,AND KEY EN–8
2. ALL SHRAP CORNERS TO BE CHAMFERED.
1. ALL DIMENSIONS ARE IN MILLIMETRES.

N O T E S

RDSO SPECIFICATION No.TM/HM/6/127–REV–2	1: , 1:				
SPECIFICATION	SCALE	ALT	DESCRIPTION	AUTHY	DRG.NO. TM/0321–REV–1

R. D. S. O.

ECCENTRIC VIBRATION SHAFT WITH DISC AND NUT

(PART No. DL–23–401)

(PROVISIONAL)

CANC./SUPED REVED.